Greening the workplace: how green authentic leadership and culture drive green creativity

Shalini Shukla, Hera Fatima Iqbal and Ila Pandey
Department of Management, Sikkim University, Gangtok, India

Received 28 June 2025
Revised 19 November 2025
14 February 2026
4 May 2026
9 July 2026
Accepted 9 July 2026

Abstract

Purpose – The purpose of this study is to explore how Green Authentic Leadership (GAL) and Green Culture (GC) influence Green Organizational Citizenship Behavior (GOCB), and how this, in turn, facilitates Green Creativity within organizations.

Design/methodology/approach – A quantitative research design was used to accomplish the research objectives. Structured questionnaires were used to collect the primary data from 410 (n) non-paramedic and administrative employees on the direct payroll of private hospitals in Delhi NCR.

Findings – The findings highlighted that GAL and GC significantly influence the GOCB, which, in turn, shapes green creativity. This also addresses that GOCB serves as a mechanism through which leadership and culture emerge as important determinants of creativity among employees involved in direct operations of private hospitals in the context of sustainability. Consequently, the study helps to expand the theoretical boundaries of GAL and GC in the context of green creativity within the healthcare sector.

Research limitations/implications – The limitation of the study falls under the cross sectional design and is confined to private hospitals in Delhi NCR. These findings offer practical value to healthcare administrators and policymakers seeking to promote sustainable practices. The study further helps to expand the theoretical boundaries of GAL and GC in the context of green creativity.

Originality/value – By integrating GAL with green creativity this study provides a novel framework for understanding how healthcare organizations can enhance their sustainability efforts and extend the existing literature on eco-innovation.

Keywords Green authentic leadership, Green culture, Green organizational citizenship behavior, Green creativity, Green innovation

Paper type Research article

Introduction

In the context of sustainability, creativity plays a significant role in addressing organizational challenges across sectors and the healthcare industry is no exception. In the present scenario, where ecological concerns are being escalated at many forums, the healthcare industry is facing significant sustainability challenges. As, this is characterized by large amounts of medical & non-medical waste generation, high-energy consumption, inefficient resource management and allocations (Balay-Odao *et al.*, 2024; Lee, Huang, Yan, Lui, & Ye, 2024). Thus, opting for greener and cleaner alternatives is becoming imperative and includes use of renewable energies like solar panels and harvesting rainwater along with construction of green buildings to reduce carbon footprint. However, traditional methods of resource management are no longer generating the desired outcomes and have been found to be inadequate, compelling the sector to explore innovative emerging technologies and methods that address these shortcomings (Shamshad & Rehman, 2025; Tanveer *et al.*, 2022). This shift underlines the need for policies and strategies that embed environmental considerations into the daily operations of healthcare industry. Öğretmenoğlu, Akova, and Göktepe (2022) emphasize that

IIMBG Journal of Sustainable Business and Innovation
Vol. 4 No. 2, 2026
pp. 206-230
Emerald Publishing Limited
e-ISSN: 2753-4022
p-ISSN: 2976-8500
DOI 10.1108/IJSBI-06-2025-0037

© Shalini Shukla, Hera Fatima Iqbal and Ila Pandey. Published in *IIMBG Journal of Sustainable Business and Innovation*. Published by Emerald Publishing Limited. This article is published under the Creative Commons Attribution (CC BY 4.0) licence. Anyone may reproduce, distribute, translate and create derivative works of this article (for both commercial and non-commercial purposes), subject to full attribution to the original publication and authors. The full terms of this licence may be seen at http://creativecommons.org/licences/by/4.0/

Downloaded from ftp.nowpublishers.com/ijsbi/article-pdf/4/2/206/11788660/ijsbi-06-2025-0037en.pdf by guest on 22 October 2026

in resource intensive sector such as health care, it is mandated to have regulatory pressure for sustainability, which is rising in today's time. There are further empirical evidences, which suggested that accreditations compel these healthcare institutions to integrate substantiality into their operations (Eckelman & Sherman, 2016; Practice Greenhealth, 2020).

Green innovation is crucial and imperative in organizations and takes employees into account to support these transformations and innovations (Chen & Chang, 2013; Dangelico & Pujari, 2010). Greener alternatives such as green hospital infrastructure, green operations, green human resource management, green organizational culture and climate, green transportation, green technology and others are instrumental in creating a sustainable ecosystem for healthcare industry (Karliner, Slotterback, Boyd, Ashby, & Steele, 2019; World Health Organization, 2017). Additionally, these practices enhance operational efficiency and mitigate negative environmental impacts (Hart, 2021). However, these steps alone are insufficient to enhance sustainability and innovation. Nevertheless, the successful implementation of any policy or these green initiatives does not solely depend upon the system – it relies on employee commitment and the leadership. The translation of these policies and practices depends on how employees in the origination perceive their roles which address the crucial role in bridging the gap between intent and actual outcomes (Bandura, 1986).

In the healthcare sector, which is highly complex and dynamic, where human behavior and organizational culture play a significant role, leadership acts as a catalyst for driving sustainability. Thus, the characteristics and leadership style of leaders (i.e. authenticity, as examined in this study) are significant factors in the sustainability endeavors of organizations.

As per Walumbwa, Avolio, Gardner, Wernsing, and Peterson (2008) authentic leadership (AL) can be described as a leadership, "*Which puts emphasis on building ethical climate and positive psychological attributes*". So, if leaders' behavior authentically reflected their stated values, meaning being authentic at workplace, workers tend to follow their ideas and practices and put extra efforts to generate positive environmental outcomes at workplace.

In recent times, authentic leadership theory has increasingly been researched in the context of organizational imperatives such as citizenship behavior, innovation, perceived insider status, resilience of employees and error management climate. This theory states that authentic leaders exhibit *transparency, openness, self-awareness and decision-making* that develop supporting organizational climate. Supporting climate led the employees to demonstrate required behavior such as citizenship behavior and commitment towards organizational innovation and creativity (Avolio & Gardner, 2005; Li & Zhang, 2022). Organizational citizenship behavior (OCB) includes any voluntary action or efforts that are not a part of employee's regular job requirement but contribute towards the organizational effectiveness and outcomes (Organ, 1988). Increasingly, numbers of studies (Walumbwa *et al.*, 2008; Avolio & Gardner, 2005; Rego, Sousa, Marques, & e Cunha, 2012; Hassan & Ahmed, 2011) have confirmed the significant positive role played by leader's authenticity in developing OCB eventually led to improved performance (Tak & Roh, 2016; Ahmad & Shahid, 2020).

Hence, it can be understood that leader's authenticity plays very important role in the engaging workforce in proactive citizenship behavior (Jung, 2022; Tak & Roh, 2016). Thus, attaining green or sustainable organizational goals can be better strategized by enforcing positive leader-employee relationships. However, these relationships are well tested in case of transformational or servant leadership, authentic leadership phenomena are underexplored specially in the context of green creativity and innovation (Rehman & Zeb, 2023). Limited numbers of studies (Rehman & Zeb, 2023; Jha R, 2025) have focused on the leader's authenticity for generating creativity but the process merely focused on variables like trust and self-efficacy. In addition, unlike other leadership approaches, authentic leadership facilitates by embedding the values from environment of an organization.. Further green organizational citizenship behavior acts as a critical behavioral mechanism, depicting employees' voluntary engagement in environmental initiatives beyond formal job requirements (Organ, 1988; Boiral, 2009). Such discretionary engagement creates collaboration necessary and required for

Downloaded from ftp.nowpublishers.com/ijsbi/article-pdf/4/2/206/11788660/ijsbi-06-2025-0037en.pdf by guest on 22 October 2026

the emergence of green creativity, which is therefore conceptualized not as an isolated outcome but as the downstream result of sustained citizenship behavior and leadership-driven cultural alignment (Rehman & Zeb, 2023). By integrating authentic leadership, Green OCB, and green creativity into a coherent, process-oriented framework, this study explains how leadership enables sustainability outcomes in healthcare through employee behaviors that act as conduits between leadership and innovative creativity.

Role of green culture and green citizenship behavior is largely under examined particularly in private healthcare sector within emerging economies like India wherein sustainability are rapidly evolving.

Although authentic leadership, HRM and Green HRM have been explored in few sectors including service, manufacturing and hospitality, empirical evidence from healthcare sector. Also, findings from other sectors cannot be generalized to the healthcare setting due to its ethical accountability, high regulatory pressures, limited flexibility and resource intensity. In addition, limited attention has been paid to green leadership which fosters creativity within healthcare and especially in emerging economies. Keeping all these research gaps in mind, present study tried to find out the role of green AL and green organizational culture in the presence of green OCB on green creativity of employees in private healthcare organizations. Apart from it, the study is a novel attempt to extend authentic leadership theory into the realm of sustainability. Thus, it can be anticipated that if organizations want their employees to be oriented towards sustainability and green innovation, leader should play its role in shaping organizational imperatives. Based on above discussion, present study tried to answer the following research questions.

RQ1. How does leader's authenticity impact the employees to put extra efforts towards sustainable initiatives in healthcare industry?

RQ2. How do authentic leaders shape green organizational culture in healthcare industry?

RQ3. How does employee's green organizational citizenship (OCB) behavior lead to green creativity?

The very first part of the paper deals with introduction followed by literature review and hypotheses development. Later parts of the paper are all about the methodology adopted for conducting this research, data analysis and discussion respectively. Subsequently, implications, future directions and conclusions of the study have been discussed.

Rationale of the study

The healthcare sector plays a crucial role in ensuring the well-being of communities, however its day-to-day operations impact the environment. From higher energy consumption to generation of waste (biomedical and non-medical), this sector faces tremendous sustainability challenges. This underscores the critical importance of environmental sustainability in healthcare sector (Balay-Odao *et al.*, 2024). With the rise in awareness about climate change globally and conservation of resources, healthcare sector is urged to adopt and practice sustainability. Embedding sustainability in healthcare will help India achieve and support the Sustainable Development Goals (SDG) and UN based emission goals. It will help the policymakers lay emphasis on healthcare sector from reactive to proactive institutions. As mentioned, the healthcare sector serves a huge population, hence incorporating effective green leadership interventions has the potential social and environmental impact. Hence, by integrating leadership and creativity, healthcare institutions will be able to address ecological issues and challenges more efficiently. At organizational level the integration of effective leadership and green creativity can enable organizations to reduce operational costs, gain competitive edge in market and enhance organizational efficiency. Such integration contributes to attainment of global environmental goals with strengthening goodwill & image. In this context, workforce that generates creative ideas and strategies is able to tap the

Downloaded from ftp.nowpublishers.com/ijsbi/article-pdf/4/2/206/11788660/ijsbi-06-2025-0037en.pdf by guest on 22 October 2026

opportunities for improving resource utilization, energy efficiency and financial performance (Zameer *et al.*, 2021a,b). Thus, these employees are perceived as key assets of companies and management prefer their development and retention to attain sustainability-oriented capabilities. As a result, it helps organizations to have a targeted approach for developmental programs and sustainability goals (Zeb, 2020). Hence, research on authentic leadership, culture and green creativity is imperative in the present context, where sustainability is a shared responsibility among all stakeholders. Furthermore, at employee level/individual level when green authentic leaders exhibit authenticity, they inspire employees to adopt environmental values and voluntary initiatives in sustainability at workplace.

The importance of the study in societal contexts can be understood as promoting sustainable practices in the urban region of Delhi NCR, which is one of the most polluted and resource-stressed regions. Hence, the burden of healthcare delivery is increasing and intensifying in Delhi NCR making the integration and amalgamation of green practices crucial. Although prior research has examined OCB and authentic leadership in general organizational settings, limited attention has been paid to their interaction in promoting green creativity within healthcare organizations in emerging economies. Hence, we have the research objectives below:

RO1. To study the impact of green authentic leadership on green culture and OCB.

RO2. To understand the mediating role of green organizational citizenship behavior in enhancing green creativity in healthcare.

Literature review and hypotheses development

Authentic leader theory

Authentic leadership is defined as "*a process that draws from both positive psychological capacities and a highly developed organizational context, which results in both greater self-awareness and self-regulated positive behaviors on the part of leaders and associates, fostering positive self-development*" (Luthans & Avolio, 2003, p. 243). Walumbwa *et al.* (2008), identified four components of authentic leadership namely, Self-awareness, Balanced Processing, Transparency and Internalized Moral Perspective. Further, building on this foundation, authentic leader depicts ethical orientation with various emotions such as hope and trust (Avolio, Gardner, Walumbwa, Luthans, & May, 2004). Hence, extending authentic leadership into the domain of sustainability, we can understand GAL as a style of leadership, which facilitates the creation of environmentally friendly workplace by promoting unrestricted idea sharing, transparency and leading by example (Srivastava, Mani, Yadav, & Joshi, 2020). However, the relationship between leadership and culture is well established in literature (Schein, 2010), focused on how leaders create, embed and transmit the organizational culture. ud Din, Tanveer, and Khan (2025) emphasized the role of leadership, HR practices, and organizational culture in achieving sustainable organizational performance, aligning with the integrated framework of the present research. Another study by Qalati, Badwy, Al-Romeedy, and Hasanein (2026) shows that authentic leadership cultivates green commitment through trust and innovation, highlighting its relevance for creativity-driven sustainability outcomes. But literature is limited to the role of leader's authenticity in the realm of sustainability and green culture. Thus, it becomes interesting to see if AL theory can be useful in generating green behavior (creativity) among employees or not in dynamic healthcare sector.

GAL and green culture

Organizational culture offers a framework of expectations, which establishes standards and norms for employees, providing leaders justification for their actions. Therefore, it is

Downloaded from ftp.nowpublishers.com/ijsbi/article-pdf/4/2/206/11788660/ijsbi-06-2025-0037en.pdf by guest on 22 October 2026

reasonable to anticipate significant relationship between authentic leadership and organizational culture (Schein, 1985). Hence, Schein's (1985) work complements the idea that leaders help sustain cultural value, which leaders promote. Talking about green organizational culture, it can be understood, employees go beyond profit-seeking goals to reduce the negative effects and promote positive impacts on environment (Sroufe, Liebowitz, & Sivasubramaniam, 2010). Undoubtedly, there has been an increase in demand to develop and incorporate policies, which include green behaviour, and therefore HR function/department is coming up with sustainability concepts into its practices and policies (Saeed *et al.*, 2019). This shift is leading to green behavior, green leadership and development of green culture at workplace (Saeed *et al.*, 2019; Cheema, Afsar, & Javed, 2020). However, at one level (top management) leadership leads to development of culture at large, but at another end (middle or lower levels) organizational culture leads to nurturing of leadership. In the context of creativity at the operational level, it is rational to consider green culture as an antecedent of GAL, which may eventually lead to green creativity through green OCB. Luthans and Avolio (2003) emphasized the importance of organizational settings and context (Vision, Mission, Strategy and Culture) for the development of authentic leadership. So, for the development of specific traits/types of leadership, cultural alignment becomes mandatory. Thus, the following hypothesis has been formulated.

H1. Green organizational culture has significant association with GAL.

GAL and green OCB

Authentic leadership has received much attention from practitioners and academics alike due to research evidence in support of the fact that authentic leadership enhances the sense of well-being and leads to higher job performance among the employees (Nelson *et al.*, 2014; Chaudhary & Panda, 2018). Studies (Ilies, Morgeson, & Nahrgang, 2005; Clapp-Smith, Vogelgesang, & Avey, 2009; Moriano, Molero, & Lévy Mangin, 2011) have revealed that higher degree of authentic leadership leads to higher level of satisfaction with the leader and commitment towards the organization. There has been various research (Ilies *et al.*, 2005; Colquitt, Scott, & LePine, 2007; Wong & Cummings, 2009), which revealed authentic leaders have influenced the employees to display organizational citizenship behavior (OCB). Employees take these leaders as their role models, which leads to increased work satisfaction and commitment (Avolio *et al.*, 2004; Gardner, Cogliser, Davis, & Dickens, 2005; Ilies *et al.*, 2005). Hence trust and a commitment leads to OCB (Colquitt *et al.*, 2007; Wong & Cummings, 2009). As per Avolio and Gardner (2005) employees who are under the supervision of authentic leaders tend to exhibit greater OCB, who created a fair and open environment. Further extending this in context of environmental domain Green OCB can be understood as an individual behavior, which is not formally rewarded by the organization but promotes organizational environmental management (Boiral, 2009). The connection between authentic leadership and Green OCB can be understood as mechanism of value and role modeling where the leader exhibits ethical and sustainability-oriented behavior. However, numerous studies (Walumbwa, Peterson, Avolio, & Hartnell, 2010; Valsania, Leon, Alonso, & Cantisano, 2012; Laschinger, Wong, & Grau, 2012; Farid *et al.*, 2020) have already been done on OCB and AL but literature is limited on their interplay in the context of environment and sustainability. This gap highlights the need to examine how authentic leadership can specifically foster Green OCB as a pathway toward achieving organizational sustainability outcomes.

These are discretionary green behaviors undertaken by employees within the organization to promote environmental protection. These behaviors are exhibited voluntarily and extend beyond employees' roles, responsibilities and work expectations (Paillé, Chen, Boiral, & Jin, 2014; Paille, Mejıa-Morelos, Amara, & Norrin, 2022; Raineri & Paillé, 2016). Thus, it involves employees communicating and providing suggestions to help improve organizational environmental management. Employees are more likely to contribute to environmental

Downloaded from ftp.nowpublishers.com/ijsbi/article-pdf/4/2/206/11788660/ijsbi-06-2025-0037en.pdf by guest on 22 October 2026

management and sustainability, which again supports Green OCB, and those who do so are more likely to take the initiative to persuade staff members to embrace and take part in environmental events hosted by the organization with the support of leaders' inspiration and vision (Paille *et al.*, 2022; Mi *et al.*, 2019). Leaders can play a critical role in enhancing extra role behavior among employees by instilling confidence and autonomy (Podsakoff, MacKenzie, Paine, & Bachrach, 2000). By integrating GAL and Green OCB, this study advances more grounded explanation of sustainable innovation. Recent studies have suggested sustainability increasingly conceptualizes environment-specific leadership styles and discretionary green behaviors linking organizational context to eco-innovation (Rehman & Zeb, 2023; Wu & Xu, 2025). Based on the above discussion, the following hypothesis is formulated:

H2. GAL significantly influences Green OCB among employees.

Green culture and green OCB

Any type of organizational culture that allows the employee to realize his/her full potential is considered as good culture. A number of research studies (Nisa, Santoso, & Azhad, 2018; Mahmudi & Elmi, 2020) have found that when people are in good organizational culture, where their opinion and voice are valued, they tend to perform extraordinary. Hence, employees exhibit more commitment and citizenship behavior towards organizations. Research also shows a significant relation between organizational culture and OCB (Nisa *et al.*, 2018; Mahmudi & Elmi, 2020). The prior theories (Schein, 1985; Hofstede, Neuijen, Ohayv, & Sanders, 1990; Deal & Kennedy, 1983; Cameron & Quinn, 1999) have confirmed that culture plays a crucial role as it represents the behavior followed by the members of organization. Similarly, supportive organizational culture with green organizational policies and practices increases employees' commitment, which in turn improves their eco-behavior within the company (Temminck, Mearns, & Fruhen, 2015). Chan, Hon, Okumus, and Chan (2017) found that management's green message and policies help employees improve their awareness and make them focus on environmental protection in their behaviour. Hence, as a result more attention is given to green activities, which leads to active eco-behavior (Zientara & Zamojska, 2018). Additionally, it's critical and important that employees recognize and adopt the environmental initiatives to foster Green OCB. Further Roscoe, Subramanian, Jabbour, and Chong (2019) stated Green OCB may enhance employee empowerment as it allows employees to make decisions outside their key responsibility areas leading to a culture of pro environmental progress. Temminck *et al.* (2015) also confirmed relation amongst green culture and Green OCB. Hence, following hypothesis is formulated.

H3. Green culture is significantly associated with Green OCB.

Green OCB and green creativity

Green OCB acts as a powerful booster for companies' green initiatives. Employees who go beyond the minimum in terms of environmental practices (e.g. turning off lights, reducing printing, disregarding paper cups and single use plastic cutlery.) add to resource-efficient operation. Hence involving employees to actively participate, suggest and bring new innovative ideas for green programs, which cultivate a culture of environmental responsibility in the organization (Boiral & Paillé, 2012). It also leads to better implementation and creativity in terms of organizational practices. Further, Green OCB cultivates a sense of responsibility and environmental commitment among employees (Liu, Mei, & Guo, 2021; Paillé, Chen, Boiral, & Jin, 2014). This sense of commitment allows the employee to search for new and innovative ways to save the environment and its degradation that in turn precipitate as green creativity. Thus, following hypothesis has been formulated.

Downloaded from ftp.nowpublishers.com/ijsbi/article-pdf/4/2/206/11788660/ijsbi-06-2025-0037en.pdf by guest on 22 October 2026

H4. Green OCB has a significant relationship with green creativity.

Based on the above discussion, researchers proposed the following research model shown in below Figure 1.

Methodology

Study design and population

A quantitative research approach has been used for this study. Descriptive, cross sectional research design is adopted to test the stated hypotheses and research models. Hence, cross sectional design is consistent with previous literature in regards with investigating perception and attitude constructs (Podsakoff, MacKenzie, Lee, & Podsakoff, 2003; Spector, 2019). These designs are widely accepted for capturing relationships among variables at a specific point in time. This study was carried out using a self-administered survey questionnaire developed from previous literature. Thus, this approach of research design is suitable (Spector, 2019; Rindfleisch, Malter, Ganesan, & Moorman, 2008). The population of this research includes employees of private hospitals of Delhi National Capital Region (NCR). As Delhi NCR being the capital of country represents state-of-the-art health care facilities, infrastructure and hospitals. Thus, it may be the benchmark in terms of organizational culture and practices. Various reports also suggested high density of health care facilities in national capital region with the dominance of private players. As reported in a study conducted by the National Capital Region Planning Board (2016), there are 1,488 private hospitals in the NCR with a 3:7 ratio of government to private inpatient healthcare facilities. This precipitation highlights the dense and regional significance of private hospital ecosystem in NCR and makes it appropriate sample framework for this study. The inclusion criteria focused on employees who were on the direct payroll of the hospitals. This was done to ensure their responses accurately represented the organizational culture and practices. Excluding contractual staff minimized variability in employment conditions and organizational attachment, thereby providing a more homogeneous dataset for analysis. These employees work as para and non-paramedic staff.

Sample strategy and size

This study employed a sample size of 410 respondents, selected using non-probability purposive sampling. The choice of this method was deliberate to ensure the inclusion of information rich participants who were most relevant to the organizational creativity. Non-probability sampling has a limitation on the generalizability of results and external validity. However, in this case purposive sampling approach allowed the researchers to focus specifically on individuals who were directly involved in the hospital's procedures and

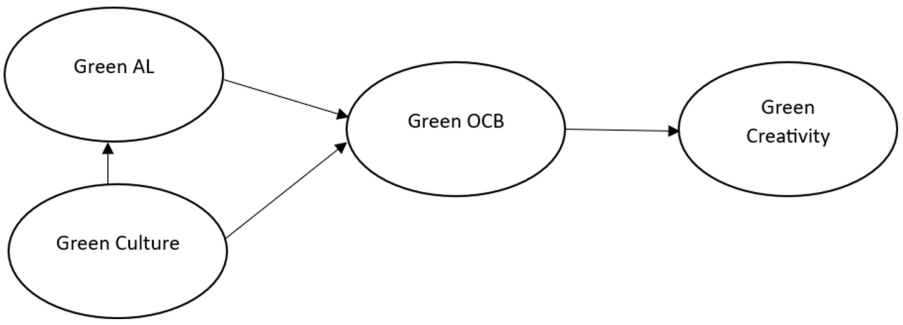

Figure 1. Proposed research model. Source: By authors

Downloaded from ftp.nowpublishers.com/ijsbi/article-pdf/4/2/206/11788660/ijsbi-06-2025-0037en.pdf by guest on 22 October 2026

strategic decision-making, ensuring the sample was representative of the target population. These decision criteria ensured that the data reflected the perspectives of employees with a consistent and direct relationship with their organizations. In addition, managerial staff was excluded to ensure greater sample homogeneity. This was done to examine how employees perceive green authentic leadership and green culture rather on perspective on how policies are designed or implemented. Another reason to exclude higher levels is that they not only influence but also evaluate organizational environment, which could act as response bias towards desirable outcome.

In place of using statistical control variables as the major way of control, the study treated a design-based approach of control by carefully limiting the samples. Only direct payroll employees of the private hospitals included in the same healthcare ecosystem of the region, but who were on direct payroll, were included, and the contractual employees and top-level managerial staff were not brought across. This purposely limited variability related to employment status, hierarchical authority and influence of organizational policy, which in turn contributed to the internal comparability among respondents. Design-based This homogeneity level is considered as an acceptable practice of addressing confounding organization effects in cross-sectional structural equation modelling studies, however, chances of the unmeasured demographic effects cannot be fully discounted.

Measures and questionnaire

For the measurement of green culture is measured using a seven items scale of Umrani *et al.* (2022). Seven items scale for green organizational citizenship behaviour have been adopted from Pham, Tučková, and Jabbour (2019). Green creativity is tested using a six-item scale derived from Maitlo *et al.* (2022). Lastly, GAL is measured by using eight-item scale taken from Walumbwa *et al.* (2008). All the items of the scales have been measured on five-point Likert scale, where 1 stands for "*Strongly disagree*" and 5 means "*Strongly agree*".

A structured questionnaire was utilized as the primary data collection tool. Validated and adopted scales were used to ensure reliability and consistency in measuring the variables namely GAL, green creativity, green organizational culture and green OCB. A cross-sectional design was used as it enables us to examine the relation with all the variables at the given time. This approach is supported by Spector (2019) who mentions that cross sectional design is best to measure effectiveness of this approach for testing theoretical relations for conceptual models. If Cronbach's Alpha is high, items on the scale are highly closely connected (Cronbach, 1951). The table below shows the alpha values for the questionnaire used in the study (see Table 1).

As this study used a cross-sectional design and self-reported survey data, the risk of common method bias (CMB) was carefully considered. Following the recommendations of Podsakoff *et al.* (2003) and Chang, Witteloostuijn, and Eden (2010), both procedural and statistical remedies were applied.

At the procedural stage, several steps were taken during questionnaire design and administration. Respondents were assured of anonymity and confidentiality. This helped reduce evaluation apprehension. The order of measurement items was counterbalanced to

Table 1. Reliability of measurements

S.N	Variable	Cronbach	Interpretation
1	Green AL	0.857	Good
2	Green Culture	0.927	Excellent
3	Green OCB	0.821	Good
4	Green Creativity	0.867	Good

Source(s): Prepared by authors

Downloaded from ftp.nowpublishers.com/ijsbi/article-pdf/4/2/206/11788660/ijsbi-06-2025-0037en.pdf by guest on 22 October 2026

minimize response-pattern bias. In addition, the academic purpose of the study was clearly explained. This encouraged respondents to provide careful and honest answers.

At the statistical stage, Harman's single-factor test was used as a preliminary assessment of common method variance. The exploratory factor analysis produced several factors with eigenvalues greater than 1.0. The first factor explained 32.40% of the total variance, which is below the recommended threshold of 50%. This result indicates that no single factor accounted for most of the covariance among the measures.

However, Harman's single-factor test alone cannot completely rule out common method bias. Therefore, common method variance is unlikely to be a serious threat to the validity of the findings. Nevertheless, some residual bias may still remain in single-source behavioral survey research.

The design of the questionnaire prioritized simplicity and clarity, making it accessible and easy for participants to respond. The language of questionnaire was English. To maximize response rates and accuracy, the questionnaires were distributed physically to respondents in their workplace settings. This method allowed the researchers to provide real-time clarification and address any questions from the respondents, thereby enhancing the quality of the data collected.

Data collection procedure

Physical data collection process was used to collect the data from target population. The data process involved gathering responses exclusively from employees in private hospitals within the Delhi NCR region. All the respondents voluntarily participated in the study, and they were duly informed and assured that the responses provided by them would be kept strictly confidential and utilized only for research purposes. This included providing information about the research objective, confidentiality and intended use of the data in the questionnaire, verbally explaining the purpose of data collection and its intended use to the respondent before collecting the data. The questionnaire was prepared in English and distributed to employees and handed to head of the departments. The participants were requested to provide their opinion on various scale items on a five-point Likert scale (ranging from "1" i.e. *strongly disagree* to "5" being *strongly agree*). Previous studies have suggested that five-point scales are sufficient to capture meaningful variances without overwhelming responses especially in organization and behavioral research context (Dawes, 2008; Revilla, Saris, & Krosnick, 2014).

A total of 440 questionnaires were distributed, out of which 410 were completed and deemed valid for analysis, achieving a high response rate. During collected process, researcher moderated employees. They were allowed to ask any questions at the time filling in the questionnaire so that non-response errors can be minimized. However, we acknowledge that presence of researcher during questionnaire filling can lead to social desirability biasness in responses. So, to minimize this, researchers have adopted no interference approach. Participants were assured of anonymity, informed that their responses would be used only for research purposes, and were given space and time to complete the questionnaire independently without any observation or interference. The data collection for the present study was conducted from January 2024 to the first week of May 2024.

Data analysis tools and techniques

Data were analyzed using Structural Equation Modeling (SEM) with AMOS version 20.0. First, the dataset was screened for missing values, outliers, and normality. Descriptive statistics were then computed to summarize the characteristics of the data.

Second, the measurement model was evaluated using confirmatory factor analysis (CFA). Model fit was assessed using several indices, including chi-square (χ^2), the chi-square/degrees of freedom ratio (CMIN/DF), the Comparative Fit Index (CFI), the Tucker–Lewis Index (TLI), the Root Mean Square Error of Approximation (RMSEA), the Standardized Root Mean

Downloaded from ftp.nowpublishers.com/ijsbi/article-pdf/4/2/206/11788660/ijsbi-06-2025-0037en.pdf by guest on 22 October 2026

Square Residual (SRMR), and PClose. These indices were interpreted in accordance with the recommendations of Hu and Bentler (1999) and Kline (2016).

Third, reliability and validity were examined. Internal consistency was assessed using Cronbach's alpha and composite reliability (CR > 0.70). Convergent validity was evaluated using average variance extracted (AVE >0.50). Discriminant validity was also examined using established criteria.

Fourth, multicollinearity was assessed at the construct level by examining the correlations and collinearity statistics among the latent variables to ensure that harmful multicollinearity among predictors was not evident.

Finally, the structural model was tested using covariance-based SEM (CB-SEM). This approach was appropriate because the study examined multiple relationships among latent constructs measured by several observed indicators. CB-SEM also allows the simultaneous estimation of measurement and structural models while providing an assessment of overall model fit.

Data analysis and findings

Respondents Profile: For detailed respondent profile please see Table 2.

Table 2. Respondent profile

S. no.	Construct	Categories	Frequency	Percentage
1	Gender	Male	150	36.7
		Female	252	61.6
		Others	7	1.7
2	Age (in years)	20–30	210	51.3
		31–40	145	35.5
		41–50	41	10
		50 and above	13	3.2
3	Education	Intermediate	70	17.1
		Graduation	227	55.5
		Post-Graduation	82	20
		Above Post-Graduation	30	7.3
4	Annual Income (in Rs.)	Up to 2.5 lakh	143	35
		2.5 lakh – 5 lakh	203	49.6
		5 lakh – 10 lakh	45	11
		10 lakh & above	15	4.4
5	Marital Status	Married	205	50.1
		Unmarried	204	49.9
6	Job Title	Nurse	134	32.8
		Labtech/Path	138	33.7
		Admin	60	14.7
		Nutritionist/Dietician	25	6.1
		HR	52	12.7
7	Experience (in years)	1 to 5	243	59.6
		6 to 10	73	17.9
		11 to 19	63	15.4
		20 & more	29	7.1
8	Background	Clinical	127	31.1
		Nursing	150	36.7
		Supportive	54	13.2
		Technical	4	1
		Administrative	74	18.1

Source(s): Prepared by authors

Downloaded from ftp.nowpublishers.com/ijsbi/article-pdf/4/2/206/11788660/ijsbi-06-2025-0037en.pdf by guest on 22 October 2026

The findings show that internalized GAL and green culture drive organizational behaviors, which then foster green creativity. In addition, the study examines and highlights the direct and indirect linkages among these constructs and creates a context on how green strategies can be applied in the organizational practice within the framework of sustainability and creativity.

Measurement model

The measurement model is important in demonstrating the reliability and validity of the constructs that fit into the SEM analysis (Figure 2). The relevance of the model is evaluated through such key indices as Composite Reliability (CR), Average Variance Extracted (AVE), and Maximum Shared Variance (MSV). Fornell and Larcker (1981) assert that acceptable CR value is above 0.70; the value of AVE should be above 0.50. The values of MSV should be lower than the value of the AVE to verify the establishment of discriminant validity. Table 3 show composite reliability, AVE, and MSV scores for each of the constructs and their significant correlations with each other. All items with factor loadings (>0.50) were held, which indicated the presence of convergent validity. HTMT ratios were also used to prove discriminant validity (according to value less than 0.85), which guarantees construct distinctiveness.

Reliability and validity interpretation. Composite Reliability (CR): The CR values for all constructs (GAL = 0.971, GCL = 0.931, Green OCB = 0.936, GCR = 0.938) tend to surpass the value of 0.70 recommended threshold suggesting that the internal strength of the constructs is in no doubt (Hair, Black, Babin, & Anderson, 2010). Average Variance Extracted (AVE): All constructs have an excess of the AVE depicted as (GAL = 0.807, GCL = 0.659, Green OCB = 0.675, GCR = 0.714) as compared with the set measure of 0.50 thus reliability of the measures is confirmed (Fornell & Larcker, 1981). Maximal Shared Variance (MSV): The values of MSV (GAL-GCL = 0.136, GAL-Green OCB = 0.437, GCL-Green OCB = 0.130) are all below the respective AVE, which shows good discriminant validity (Fornell & Larcker, 1981). Correlations: • Positive correlations (e.g. GAL → GCL = 0.314, GCL → Green OCB = 0.361) indicate strong links between leadership, culture, organisational behaviour, and creativity.

Model fit. Several indices are used to evaluate the model fit, which determines how well the hypothesised model fits the data. These indexes include CMIN/DF, CFI, SRMR, RMSEA, and PClose. According to Hu and Bentler (1999), these indices provide a strong indication of model fit. Table 4 shows the fit indices for the entire SEM model. Also, the Tucker-Lewis Index (TLI = 0.962) and Goodness of Fit Index (GPI = 0.936) only confirmed the adequacy of the model, which is also strong. The assessment factor of sample adequacy was KMO = 0.91 which showed suitability of sample in SEM.

Fit indices interpretation. The model fit indices show a good fit between the model and the data. Precisely, the CMIN/DF value of 2.018 is within the suggested range of 1 to 3, indicating an excellent model fit (Kline, 2016). According to Hu and Bentler (1999) the CFI score of 0.967 exceeds the threshold of 0.95, indicating a satisfactory fit. Furthermore, the SRMR value of 0.029 is significantly lower than the recommended cutoff of 0.08, suggesting minimum residuals and demonstrating that the model properly fits the data (Hu & Bentler, 1999). According to Browne and Cudeck (1993), the RMSEA value of 0.050 is also less than the threshold of 0.06, implying that the model fits perfectly. The PClose value of 0.513 has been observed above 0.05, which endorses the good fit and aligns with the criteria stated by MacCallum, Browne, and Sugawara (1996). These indices indicate that the model has a robust and trustworthy fit to the data.

Path analysis

Path analysis in SEM estimates the relationships between variables by examining the direct, indirect, and total effects (Figure 3). Table 5 below summarizes the regression weights for the paths in the model.

Downloaded from ftp.nowpublishers.com/ijsbi/article-pdf/4/2/206/11788660/ijsbi-06-2025-0037en.pdf by guest on 22 October 2026

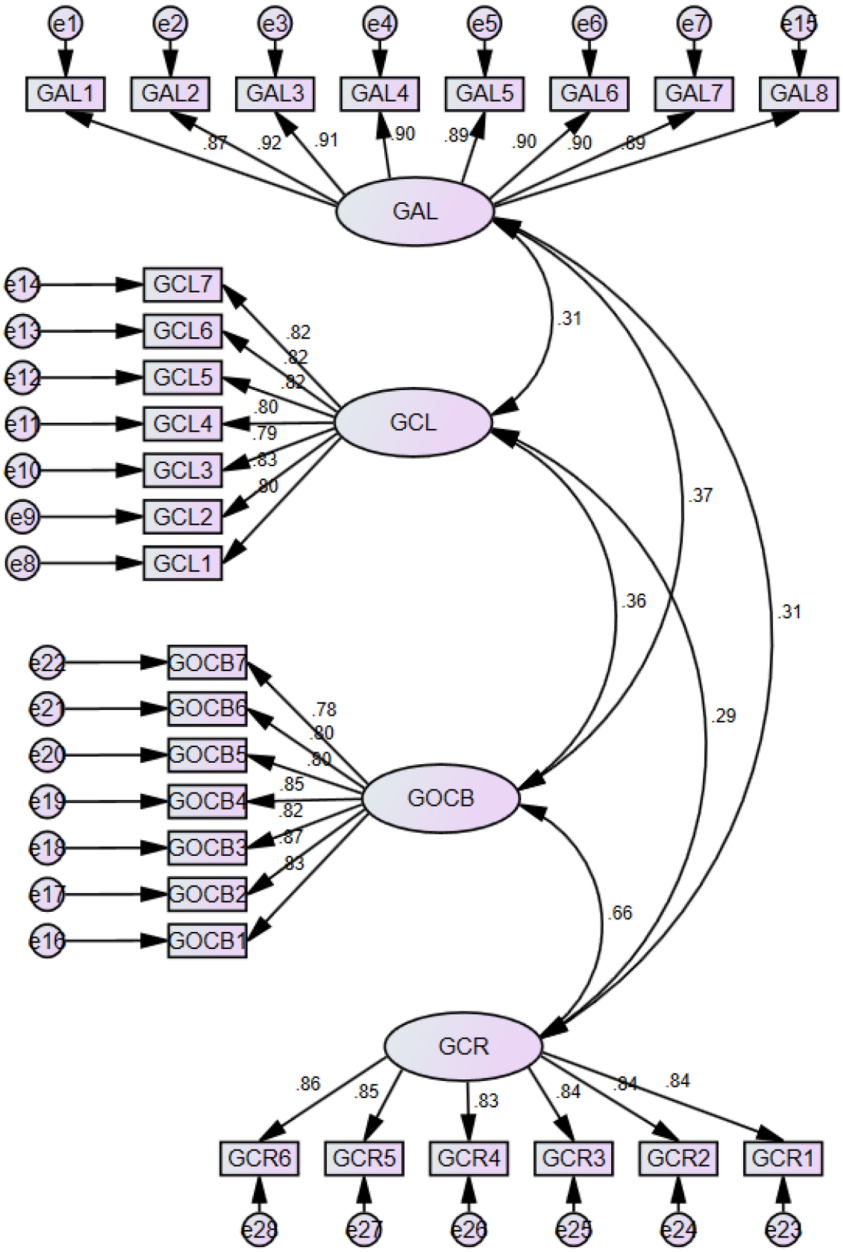

Figure 2. Measurement model. Source: By authors

Interpretation of path coefficients. The analysis's findings show several noteworthy connections between the model's elements. First, Green Culture (GCL) positively influences GAL, with a standardized coefficient of 0.330. This implies that a supportive green culture is crucial in fostering authentic green leadership, as noted by Gardner *et al.* (2005). In this regard,

Downloaded from ftp.nowpublishers.com/ijsbi/article-pdf/4/2/206/11788660/ijsbi-06-2025-0037en.pdf by guest on 22 October 2026

Table 3. Measurement model reliability and validity indicators

Construct	CR	AVE	MSV	GAL → GCL	GAL → GOCB	GCL → GOCB	GOCB → GCR
GAL	*0.971*	*0.807*	*0.136*	*0.314*	*0.369*		
GCL	0.931	0.659	0.13		0.361	0.361	
GOCB	*0.936*	*0.675*	*0.437*			*0.661*	*0.769*
GCR	0.938	0.714	0.437				

Note(s): All correlations are significant at the $^{**}p < 0.001$ level
Source(s): Prepared by authors

Table 4. Model fit indices

Fit index	Estimate	Threshold	Interpretation
CMIN/DF	2.018	1 to 3	Excellent
CFI	0.967	>0.95	Excellent
SRMR	0.029	<0.08	Excellent
RMSEA	0.05	<0.06	Excellent
PClose	0.513	>0.05	Excellent

Source(s): Prepared by authors

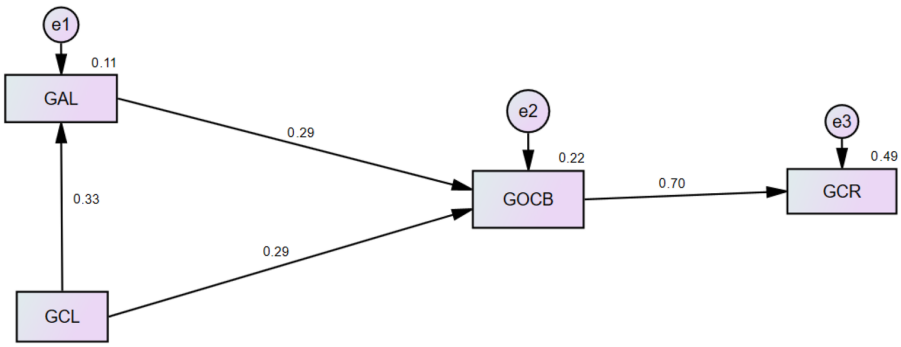

Figure 3. Path model. Source: By authors

Table 5. Path analysis results

Path	Estimate	S.E.	C.R.	*p*	Standardized estimate
GCL → GAL	0.532	0.075	7.072	***	0.33
GAL → GOCB	0.22	0.035	6.296	***	0.29
GCL → GOCB	0.353	0.056	6.258	***	0.289
GOCB → GCR	0.769	0.039	19.782	***	0.699

Source(s): Prepared by authors

Downloaded from ftp.nowpublishers.com/ijsbi/article-pdf/4/2/206/11788660/ijsbi-06-2025-0037en.pdf by guest on 22 October 2026

GAL positively impacts Green OCB with a standardized coefficient of 0.290. This would mean that green leadership behaviors are instrumental in encouraging the adoption of green behaviours by employees at work, as observed in Buil, Martínez, and Matute (2019). Furthermore, the coefficient for Green Organizational Citizenship Behaviour (Green OCB) was 0.289; this suggests that an organizational culture focusing on sustainability and green practices is likely to effectively facilitate green organizational behaviours (Kim, Eisenberger, & Baik, 2016). Finally, a substantial positive effect exists between Green Organizational Citizenship Behaviour (Green OCB) and Green Creativity (GCR) with a standardized coefficient of 0.699. This underlines the fact that green behaviours significantly contribute to the fostering of creativity within the organization, in line with the findings of Eisenberger, Cummings, Armeli, and Lynch (2001). Together, these findings underline the role of green culture and leadership in promoting sustainable organizational behaviours and fostering creativity.

Direct, indirect, and total effects in SEM analysis. In structural equation modelling (SEM), the analysis of direct, indirect and total effects is required for revealing the connections between constructs. Such effects help to clarify the mechanisms through which one variable affects another, permitting a more nuanced reading of the causal relationships posited by the model. Each effect type is then defined and explained in the power analysis section below followed by an interpretative account of the SEM result (see Table 6).

Direct effect. The amount of variance in an outcome variable that can be directly accounted for by its predictor is known as the "direct effect," which describes the immediate, unmediated relationship between two variables. The strength and direction of the association between the constructs are both reflected in the path coefficient, which is a mathematical representation of this effect.

The first column, the direct effect, represents the impact on one variable, holding all other variables constant, which go through the second one. In unmediated terms, GCL has a direct effect of 0.532 on GAL ($p < 0.001$), indicating a strong and statistically significant positive relationship. That means the green culture is positively associated with GAL. This means that as green culture gets higher in proportion of organizations, it naturally leads to a higher rate of GAL. Similarly, the direct effect of GAL on Green Organizational Citizenship Behavior (Green OCB) is 0.220 ($p < 0.001$), demonstrating a positive and statistically significant influence. This relationship suggests that as GAL increases, employees' engagement in green organizational citizenship behaviors is likely to increase as well. 'Green culture is positively associated with GAL.

Indirect effect. The mediation effects were tested with a bootstrapping method (5,000 samples), and indirect paths were proved by confidence intervals. The indirect effect ensnares the relationship between two constructs that is mediated by one or more intermediary variables. In SEM, this effect is of particular interest as it reveals the underlying processes or mechanisms through which the independent variable influences the dependent variable.

Table 6. Direct, indirect, and total effects with *p*-values

Path	Direct effect	*p*-value	Indirect effect	*p*-value	Total effect	*p*-value
GCL → GAL	0.532	***	0	N/A	0.532	***
GAL → GOCB	0.22	***	0	N/A	0.22	***
GCL → GOCB	0.353	***	0	N/A	0.353	***
GOCB → GCR	0.769	***	0.361	***	1.13	***

Note(s): All estimates are significant at the $^{**}p < 0.001$ level

Source(s): Prepared by authors

Downloaded from ftp.nowpublishers.com/ijsbi/article-pdf/4/2/206/11788660/ijsbi-06-2025-0037en.pdf by guest on 22 October 2026

The indirect effect of Green Culture (GCL) on Green Creativity (GCR) is 0.361 ($p < 0.001$), which is mediated through Green Organizational Citizenship Behaviour (Green OCB). This suggests that GCL positively influences Green OCB, which, in turn, enhances GCR. This indirect path emphasizes the importance of organizational behaviours as a conduit for translating green cultural values into creative outcomes. The indirect effect from GAL to GCR is not significant in this model, as it is mediated indirectly through Green OCB.

Total effect. The total effect, in contrast, represents the sum of the direct and indirect influence of one variable on another through the various paths implied by the model. It is obtained by adding the direct effects and the indirect effects related to a specific link. Based on the inclusion of mediators, the total effect provides a more complete understanding of the relationship between the two constructs. For the relationships under discussion, in each of the three tables, it shows that the total effect of GAL on Green Creativity (GCR) is indirect with both Green Culture (GCL) and Green Organizational Citizenship Behaviour (Green OCB) with a total effect size of 0.361 ($p < 0.001$). This strong total effect indicates that GAL promotes creativity by creating a supportive organizational culture and organizational citizenship behaviours.

In a similar fashion, the total effect of Green OCB on GCR also stands at a magnitude of 0.769 ($p < 0.001$), which is consistent with its direct effect. The outcomes show that most of the Green OCB's contribution in GCR is through the direct path in which organizational citizenship behaviours directly enhance creativity.

When reconciling both the direct and indirect effects within the model towards GCR, the overall total effect is strong at a value of 1.130 ($p < 0.01$). This suggests that the three constructs perceived leadership (GAL), perceived culture (GCL) and Green OCB act in concert to explain a substantial variation in Green Creativity, with Green OCB being the most significant. These findings indicate that green leadership, culture, and organizational citizenship behaviours are all factors that together influence firm creativity internally.

Knowing the difference between direct and indirect impacts is essential to comprehending the underlying mechanisms. As demonstrated by the direct influence of GCL on GAL, direct effects refer to the immediate effects of one variable on another. Conversely, indirect effects draw attention to the function of mediating factors, such as GCL's influence on GCR via Green OCB. A more thorough understanding of the general links between constructs is provided by the total effect, which is the sum of these effects. The statistical significance and dependability of these correlations are further supported by the p-values (all $p < 0.001$). The overall impact from Green OCB to GCR is especially remarkable, highlighting how important organisational behaviours are in advancing innovation in a framework for green leadership. These results advance our knowledge of how GAL and culture, along with citizenship behaviours, collectively influences creative outcomes in organizations.

Finally, the evidence confirms that GAL indirectly affects Green Creativity (GCR) through Green Organisational Citizenship Behaviour (Green OCB) and Green Culture (GCL). The model's overall influence on creativity emphasizes how all the elements are interconnected, even though the direct effect of Green OCB on GCR is the most significant. This emphasises the value of taking a comprehensive approach to comprehending the factors that stimulate creativity in environmentally conscious organisational environments.

Discussion

The present study aimed to explore the relationship between GAL, Green Organizational Culture and their influence on Green OCB and Green Creativity. The findings demonstrate that GAL promotes GOCB, suggesting that sustainability-oriented leadership influences not only employees' immediate behaviours but also the shared environmental values embedded within the organization. This extends Schein's organizational culture perspective by demonstrating that authentic leadership can cultivate a sustainability-oriented culture within healthcare

Downloaded from ftp.nowpublishers.com/ijsbi/article-pdf/4/2/206/11788660/ijsbi-06-2025-0037en.pdf by guest on 22 October 2026

organizations, thereby creating conditions that encourage employees' voluntary environmental behaviors and creative engagement.

GAL (As per AL theory), characterized by leaders who are transparent, self-aware, ethically oriented, and consistent, plays a pivotal role in embedding green values within organizational practices. AL also reduces the interpersonal risk and lets the employee take pro-active and environment friendly initiatives for creative solutions without the fear of negative outcomes (Psychological safety). Furthermore, communicating green values and beliefs authentically helps the employee or followers to construct mutually shared narratives about the significance of ecological accountability and responsibility. Leaders with these attributes inspire employees to prioritize sustainability, thereby cultivating a green organizational culture (Srivastava *et al.*, 2020; Rauniar and Cao, 2025). This culture is defined by shared norms, values, and practices that emphasize environmental responsibility (Afsar, Umrani, Badir, & Kiani, 2016). Through this AL encourages the followers to internalize green organizational values for more contribution through Green OCB and eco-innovativeness.

Recent studies (Wu & Xu, 2025) extending this further into sustainability, depicting organizational culture encourages green leadership which in turn inspires green behavior of employees. The significant relationship identified in this study corroborates much previous research (Schein, 1985; Robertson & Barling, 2017) findings. Robertson and Barling (2017) found that green leadership is instrumental in instilling pro-environmental behaviors among employees; thereby promoting a culture that supports green creativity.. Schein (1985) organizational culture literature has highlighted the leader's role in sustaining culture. Since authentic leadership emanates followers and becomes an element of the organizational culture (May, Chan, Hodges, & Avolio, 2003) it might be similarly recognized in the context of green culture and GAL. Hence, we can comprehend that in highly innovative organizational culture; we have a leader who emphasizes environmental sustainability. This study also will also advance the existing literature by moving beyond descriptive associations and demonstrating how leadership and culture can be operationalized to drive sustainability-oriented innovation. As Afsar and Umrani (2020) underscored the function of AL in promoting a good work climate, which in turn increases employees' propensity to perform citizenship behaviors. Similarly, Luu (2019) illustrated that green leadership has a positive effect on Green OCB, especially where the employees view their leaders as being genuinely concerned about environmental sustainability. Thus, Green OCB is the behavioral pathway by which leadership affects organizational outcomes. Moreover, the findings can be used to extend the authentic leadership theory by depicting how it can contribute to the development of psychological safety and collective meaning-making towards environmental sustainability. Additionally, employees who engage in Green OCB not only support existing sustainability efforts but also contribute innovative ideas and practices, thereby enhancing the organization's overall green creativity. The association between GAL and Green OCB indicates that the moral behaviour of leader inspires subordinates to engage in functional activities beyond work (Avolio *et al.*, 2004; Walumbwa *et al.*, 2008). Previous studies (Avolio *et al.*, 2004; Ilies *et al.*, 2005; Walumbwa *et al.*, 2008) have shown that authentic leaders enhance performance by fostering moral, social and personal obligations.

In addition, recent studies have shown pro environmental behavior linked with organizational antecedents including leadership, green culture and HRM (Abbas & Sagsan, 2019). This supports our above framework conceptualization Green OCB as mediating variable, which leads to innovation and idea generation (Liu, Yu, & Peng, 2023).

In case of organizational culture and OCB, the findings of this study are congruence with previous studies (Walumbwa *et al.*, 2008, 2010; Clapp-Smith *et al.*, 2009; Valsania *et al.*, 2012; Datta, 2015; Malik & Dhar, 2017; Farid *et al.*, 2020). Studies by Nisa *et al.* (2018) and Mahmudi and Elmi (2020) also depicted significant relationship between organizational culture and green OCB. This means, supportive organizational culture creates mutually accepted norms, beliefs, structure and expectations that induce employees to perform beyond formal job requirements. This theoretical advancement upholds the perspective that strong

Downloaded from ftp.nowpublishers.com/ijsbi/article-pdf/4/2/206/11788660/ijsbi-06-2025-0037en.pdf by guest on 22 October 2026

organizational culture works as psychological and value driven mechanism to shape employee's voluntary pro environmental behavior at workplace. The present study also shows the significant relationship between green OCB and green creativity, and the results and consistent with many previous studies (Kesen, 2016; Babcock-Roberson & Strickland, 2010; Jiao, Alon, & Cui, 2011; Sultan & Hussain, 2025). Thus, organization citizenship behavior enables the employee to contribute in more innovative ways for environmental protection. The healthcare sector, especially corporate hospitals, may leverage this, by enhancing leader-culture alignment. This may let them have better positions in terms of responsible management towards environment and society. The discourse puts the findings also in context of the emergent economy environments and acknowledges the institutional dynamics peculiar to the Indian healthcare system, as well as provides theoretical subtlety beyond confirmatory interpretations.

Implications

Present study highlighted the importance of leader's authenticity and its role in enhancing sustainable organizational practices in private healthcare organizations. The study presents many practical and theoretical implications, policy suggestions for professionals, strategists and government officials involved in ensuring and boosting ecological sustainability, especially in healthcare industry.

(1) *Political and policy implications* of the present study highlight the necessity of aligning the hospital green initiatives with national and industrial level sustainable policies. This also suggest that healthcare organizations may consider incorporating sustainability-oriented leadership and organizational culture into their internal environmental management strategies Policymakers may consider rewards and providing incentives to hospitals that integrate green authentic leadership and green cultural practices into their operations through policy frameworks, adoption of green buildings, subsides or accreditation standards rather than focusing solely on technological or operational initiatives. Hospitals may also benefit from leadership development and employee engagement practices that encourage voluntary environmental behaviours. Hence hospitals can play active role in advancing regional environmental goals with simultaneously improving compliance. *Discussing practical implications*, this study points out how green authentic leaders can inspire and motivate employees towards adoption of sustainable practices and induce green ideas for ensuring creativity. Leaders are key instruments for developing green culture, green citizenship behavior among employees so that they can volunteer in green initiatives and put extra efforts to ensure organizational sustainable goals. If leaders demonstrate authenticity at workplace, a trust relationship is developed between leader and employee, and these help employees to be ensure about their part in promoting sustainability. This assurance allows them to put extra effort into thinking out of box, be confident in terms of their contribution to greener organizational outcomes, specifically green creativity. Additionally, various training and development programs can be given to potential leaders that will prepare them with required instruments and information to spearhead green alternatives and efforts successfully. We would

(2) *Theoretically,* study fills the knowledge and literature gap, as discussed in introduction section. Authentic leadership and organizational culture are collectively being studied with the mediation of citizenship behavior. Additionally, theory of authentic leadership is extended in the context of sustainability and healthcare industry and rather introducing a new theoretical perspective, the findings provide empirical support for the behavioral pathway through which GAL influences the outcome variable via GOCB. In doing so, the study extends the application of Authentic

Downloaded from ftp.nowpublishers.com/ijsbi/article-pdf/4/2/206/11788660/ijsbi-06-2025-0037en.pdf by guest on 22 October 2026

Leadership Theory to the sustainability context and contributes empirical evidence from the underexplored setting of private healthcare organizations in an emerging economy

(3) Through the empirical demonstration of the mediating effect of Green OCB, present research fills the niche between different leadership theories and sustainability research. Furthermore, by emphasizing the role of green authentic leaders in sustainable practices, the study highlights how hospitals can improve their reputation and become recognized as socially responsible institutions. The amalgamation of green creativity will help in reducing the daily carbon footprint and create better environment for communities. This will also enhance, position of India and its healthcare sector at global level in terms of ecological footprints.

Conclusion

From a broader perspective, present study reinforces the urgent need for healthcare sector to act proactively rather than reactively.. This study expands the previous research work of and Rehman and Zeb (2023) showing authentic leader as an important antecedent in fostering green creativity at workplace. Other studies have primarily focused on service and manufacturing industries while our study provides evidence in healthcare sector. Our findings add to the existing literature on green authentic leadership with integrating leadership and green creativity, which adds hospitals as environmentally responsible institutions. The study also explores the role of green creativity in healthcare sector, which is a necessity for long-term sustainability. Further, green authentic leadership and green culture when combines enhances conservation of resources along with adhering to compliance and stakeholder trust. By including these practices and approaches hospitals act as sustainability driven organization. Finally, study concludes that creativity is imperative not only for competitive advantage but for driving sustainability in the healthcare sector and green authentic leadership and green culture may contribute to the conservation of resources for future generations but also builds a sustainable, responsible and resilient healthcare system. Additionally, with our study by integrating Green Authentic Leadership, green culture and green OCB we provide a new empirical insight into how creativity in healthcare organizations. And by our study, drawing the evidence from private healthcare sector in emerging economies, this offers insights, which extend the applicability of green leadership theory beyond commonly, examined contexts.

Limitations

This section highlights the boundaries of the study and offers opportunities for further exploration. The research was conducted within private hospitals of Delhi NCR region. This provides insights into geographical and industrial context, and the findings of the study may not be generalizable to other parts of country or regions. The reason being the organizational culture may differ significantly. Non-healthcare sector and public hospitals were excluded which also limits the applicability of the results and findings. The research also does not capture the dynamics of public hospitals or public private partnership hospitals. Hence, narrowing the scope, in terms of organizational or sectoral contexts. Considering the fact that the research relies on the cross-sectional self-reports based on the one source, the issue of the common method variance cannot be eliminated. Also, in addition, the study relied on self-reported questionnaire data, which may be subject to social desirability bias, as respondents could have provided socially acceptable responses, particularly regarding environmentally responsible behaviors. Though some procedural controls and statistical controls were applied to reduce this risk, future studies, which use longitudinal designs or multi-source data would help us to have better causal inferences.

Downloaded from ftp.nowpublishers.com/ijsbi/article-pdf/4/2/206/11788660/ijsbi-06-2025-0037en.pdf by guest on 22 October 2026

Future directions

This study has used a cross-sectional research design, which in turn has inherent limitations to establish causality among the variables. In this sense, longitudinal research studies can provide deeper and clear insights into how green AL and green organizational culture evolves over the period and shape green creativity and innovation. Present study has contributed to prevalent literature by examining the mentioned relationship among different variables in private healthcare hospitals in Delhi NCR, there are still evidence based and knowledge gaps, which need to be identified and addressed. Similarly, comparative analysis between urban and rural hospitals, public and private can offer insight into differences in green practices.

Further research will not only enhance the generalizability but also provide deeper understanding of these practices across diverse organizational sectors and settings. Apart from it, standalone study on public hospitals may also offer different and holistic views on how green organizational behavior and leadership precipitate across different healthcare systems and settings. Controlled dynamics, limited resources and infrastructure, large footfall may yield contrasting insights. Additionally, enriching studies to include other industries and sectors would provide a broader understanding of GAL and green organizational culture nexus. Moreover, other extraneous variables such as employee engagement, organizational commitment, intention to leave, autonomy, organizational size, technology adoption and resource availability can also be taken as mediator or moderator to enhance the understanding of eco-innovation process. Additionally, qualitative methods of data collections could enrich the findings by capturing in-depth perspectives on green leadership and creativity. Contractual, ad-hoc and temporary staff and labor were not included in this study that may form significant part of workforce in selecting private hospitals. Therefore, including these types of employees in study may offer new insights into interplay of variables like long-term commitment, job autonomy, accountability and responsibility etc. At the end, inclusion of other theoretical frameworks (Social Learning Theory, Self-Determination Theory and Ability-Motivation-Opportunity theory etc.) could provide a more comprehensive and deeper understanding of the process that lead to green creativity among employees in the workplace.

References

Abbas, J., & Sagsan, M. (2019). Impact of knowledge management practices on green innovation and corporate sustainable development: A structural analysis. *Journal of Cleaner Production*, *229*, 611–620. doi: 10.1016/j.jclepro.2019.05.024.

Afsar, B., & Umrani, W. A. (2020). Transformational leadership and innovative work behavior: The role of motivation to learn, task complexity and innovation climate. *European Journal of Innovation Management*, *23*(3), 402–428.

Afsar, Umrani, B., Badir, Y., & Kiani, U. S. (2016). Linking spiritual leadership and employee pro-environmental behavior: The influence of workplace spirituality, intrinsic motivation, and environmental passion. *Journal of Environmental Psychology*, *45*, 79–88. doi: 10.1016/j.jenvp.2015.11.011.

Ahmad, S., & Shahid, M. S. (2020). Predicting organizational citizenship behavior among universities' contractual teaching staff: A developing country perspective. *Review of Applied Management and Social Sciences*, *3*(3), 459–473. doi: 10.47067/ramss.v3i3.82.

Avolio, B. J., & Gardner, W. L. (2005). Authentic leadership development: Getting to the root of positive forms of leadership. *The Leadership Quarterly*, *16*(3), 315–338. doi: 10.1016/j.leaqua.2005.03.001.

Avolio, B. J., Gardner, W. L., Walumbwa, F. O., Luthans, F., & May, D. R. (2004). Unlocking the mask: A look at the process by which authentic leaders impact follower attitudes and behaviors. *The Leadership Quarterly*, *15*(6), 801–823. doi: 10.1016/j.leaqua.2004.09.003.

Babcock-Roberson, M. E., & Strickland, O. J. (2010). The relationship between charismatic leadership, work engagement, and organizational citizenship behaviors. *The Journal of Psychology*, *144*(3), 313–326. doi: 10.1080/00223981003648336.

Downloaded from ftp.nowpublishers.com/ijsbi/article-pdf/4/2/206/11788660/ijsbi-06-2025-0037en.pdf by guest on 22 October 2026

Balay-Odao, E. M., Colet, P. C., Almazan, J. U., Kuntuganova, A., Syzdykova, A., Kavashev, Z., . . . Cruz, J. P. (2024). Environmental sustainability in healthcare: A qualitative study of the perspectives of nursing, medical and public health students in Kazakhstan. *Nurse Education in Practice*, *76*, 103917. doi: 10.1016/j.nepr.2024.103917.

Bandura, A. (1986). *Social foundations of thought and action: A social cognitive theory.* Englewood Cliffs, NJ: Prentice-Hall, *1986*(23-28), 2.

Boiral, O. (2009). Greening the corporation through organizational citizenship behaviors. *Journal of Business Ethics*, *87*(2), 221–236. doi: 10.1007/s10551-008-9881-2.

Boiral, O., & Paillé, P. (2012). Organizational citizenship behaviour for the environment: Measurement and validation. *Journal of Business Ethics*, *109*(4), 431–445. doi: 10.1007/s10551-011-1138-9.

Browne, M. W., & Cudeck, R. (1993). Alternative ways of assessing model fit. In K. A. Bollen, & J. S. Long (Eds.), *Testing Structural Equation Models* (pp. 136–162). Sage.

Buil, I., Martínez, E., & Matute, J. (2019). Transformational leadership and employee performance: The role of identification, engagement and proactive personality. *International Journal of Hospitality Management*, *77*, 64–75. doi: 10.1016/j.ijhm.2018.06.014.

Cameron, K. S., & Quinn, R. E. (1999). *Diagnosing and changing organisational culture: Based on the competing values framework*. Addison-Wesley Publishing.

Chan, E. S., Hon, A. H., Okumus, F., & Chan, W. (2017). An empirical study of environmental practices and employee ecological behavior in the hotel industry. *Journal of Hospitality and Tourism Research*, *41*(5), 585–608. doi: 10.1177/1096348014550873.

Chang, S. J., Witteloostuijn, A. V., & Eden, L. (2010). From the editors: Common method variance in international business research. *Journal of International Business Studies*, *41*(2), 178–184. doi: 10.1057/jibs.2009.88.

Chaudhary, R., & Panda, C. (2018). Authentic leadership and creativity: The intervening role of psychological meaningfulness, safety and work engagement. *International Journal of Productivity and Performance Management*, *67*(9), 2071–2088.

Cheema, S., Afsar, B., & Javed, F. (2020). Employees' corporate social responsibility perceptions and organizational citizenship behaviors for the environment: The mediating roles of organizational identification and environmental orientation fit. *Corporate Social Responsibility and Environmental Management*, *27*(1), 9–21. doi: 10.1002/csr.1769.

Chen, Y. S., & Chang, C. H. (2013). The determinants of green product development performance: Green dynamic capabilities, green transformational leadership, and green creativity. *Journal of Business Ethics*, *116*(1), 107–119. doi: 10.1007/s10551-012-1452-x.

Clapp-Smith, R., Vogelgesang, G. R., & Avey, J. B. (2009). Authentic leadership and positive psychological capital: The mediating role of trust at the group level of analysis. *Journal of Leadership and Organizational Studies*, *15*(3), 227–240. doi: 10.1177/1548051808326596.

Colquitt, J. A., Scott, B. A., & LePine, J. A. (2007). Trust, trustworthiness, and trust propensity: A meta-analytic test of their unique relationships with risk taking and job performance. *Journal of Applied Psychology*, *92*(4), 909–927. doi: 10.1037/0021-9010.92.4.909.

Cronbach, L. J. (1951). Coefficient alpha and the internal structure of tests. *Psychometrika*, *16*(3), 297–334. doi: 10.1007/bf02310555.

Dangelico, R. M., & Pujari, D. (2010). Mainstreaming green product innovation: Why and how companies integrate environmental sustainability. *Journal of Business Ethics*, *95*(3), 471–486. doi: 10.1007/s10551-010-0434-0.

Datta, B. (2015). Assessing the effectiveness of authentic leadership. *International Journal of Leadership Studies*, *9*(1), 1–14.

Dawes, J. (2008). Do data characteristics change according to the number of scale points used? An experiment using 5-point, 7-point and 10-point scales. *International Journal of Market Research*, *50*(1), 61–104. doi: 10.1177/147078530805000106.

Downloaded from ftp.nowpublishers.com/ijsbi/article-pdf/4/2/206/11788660/ijsbi-06-2025-0037en.pdf by guest on 22 October 2026

Deal, T. E., & Kennedy, A. A. (1983). Corporate cultures: The rites and rituals of corporate life: Addison-Wesley. *Business Horizons*, 1982, *26*(2), 82–85, 0-201-10277-3. $14.95. doi: 10.1016/0007-6813(83)90092-7.

Eckelman, M. J., & Sherman, J. (2016). Environmental impacts of the US health care system and effects on public health. *PLoS One*, *11*(6), e0157014. doi: 10.1371/journal.pone.0157014.

Eisenberger, R., Cummings, J., Armeli, S., & Lynch, P. (2001). Perceived organizational support, discretionary treatment, and job satisfaction. *Journal of Applied Psychology*, *86*(5), 801–807. doi: 10.1037/0021-9010.86.5.801.

Farid, T., Iqbal, S., Khan, A., Ma, J., Khattak, A., & Naseer Ud Din, M. (2020). The impact of authentic leadership on organizational citizenship behaviors: The mediating role of affective-and cognitive-based trust. *Frontiers in Psychology*, *11*, 1975. doi: 10.3389/fpsyg.2020.01975.

Fornell, C., & Larcker, D. F. (1981). Evaluating structural equation models with unobservable variables and measurement error. *Journal of Marketing Research*, *18*(1), 39–50. doi: 10.1177/002224378101800104.

Gardner, W. L., Cogliser, C. C., Davis, K. M., & Dickens, M. P. (2005). Authentic leadership: A review of the literature and research agenda. *The Leadership Quarterly*, *16*(3), 1–23. doi: 10.1016/j.leaqua.2005.03.003.

Hair, J. F., Black, W. C., Babin, B. J., & Anderson, R. E. (2010). *Multivariate data analysis* (7th ed.). NJ: Prentice Hall.

Hart, J. (2021). Practice Greenhealth: Leading efforts to ensure a sustainable health care system and improved health for all. *Alternative and Complementary Therapies*, *27*(5), 250–252. doi: 10.1089/act.2021.29344.pro.

Hassan, A., & Ahmed, F. (2011). Authentic leadership, trust and work engagement. *International Journal of Human and Social Sciences*, *6*(3), 164–170.

Hofstede, G., Neuijen, B., Ohayv, D. D., & Sanders, G. (1990). Measuring organizational cultures: A qualitative and quantitative study across twenty cases. *Administrative Science Quarterly*, *35*(2), 286–316. doi: 10.2307/2393392.

Hu, L., & Bentler, P. M. (1999). Cutoff criteria for fit indexes in covariance structure analysis: Conventional criteria versus new alternatives. *Structural Equation Modeling*, *6*(1), 1–55. doi: 10.1080/10705519909540118.

Ilies, R., Morgeson, F. P., & Nahrgang, J. D. (2005). Authentic leadership and eudaemonic well-being: Understanding leader–follower outcomes. *The Leadership Quarterly*, *16*(3), 373–394. doi: 10.1016/j.leaqua.2005.03.002.

Jha, R. (2025). Does authentic leadership make employees more creative? Mediation & moderation mechanisms. *Indian Journal of Industrial Relations*, *60*(3).

Jiao, H., Alon, I., & Cui, Y. (2011). Environmental dynamism, innovation, and dynamic capabilities: The case of China. *Journal of Enterprising Communities: People and Places in the Global Economy*, *5*(2), 131–144. doi: 10.1108/17506201111131550.

Jung, J. Y. (2022). The effect of authentic leadership of deans and directors on sustainable organizational commitment at universities: Mediated by organizational culture and trust. *Sustainability*, *14*(17), 11051. doi: 10.3390/su141711051.

Karliner, J., Slotterback, S., Boyd, R., Ashby, R., & Steele, K. (2019). Healthcare's climate footprint. Verfügbarunter.

Kesen, M. (2016). Linking organizational identification with individual creativity: Organizational citizenship behavior as a mediator. *Yaşar Üniversitesi E-Dergisi*, *11*(41), 56–66. doi: 10.19168/jyu.47683.

Kim, K. Y., Eisenberger, R., & Baik, K. (2016). Perceived organizational support and affective organizational commitment: Moderating influence of perceived organizational competence. *Journal of Organizational Behavior*, *37*(4), 558–583. doi: 10.1002/job.2081.

Kline, R. B. (2016). *Principles and practice of structural equation modeling* (4th ed.). Guilford Press.

Downloaded from ftp.nowpublishers.com/ijsbi/article-pdf/4/2/206/11788660/ijsbi-06-2025-0037en.pdf by guest on 22 October 2026

Laschinger, H. K. S., Wong, C. A., & Grau, A. L. (2012). The influence of authentic leadership on newly graduated nurses' experiences of workplace bullying, burnout and retention outcomes: A cross-sectional study. *International Journal of Nursing Studies*, *49*(10), 1266–1276. doi: 10.1016/j.ijnurstu.2012.05.012.

Lee, J. J., Huang, Y., Yan, Y., Lui, Y. W., & Ye, F. (2024). Integrating climate change and sustainability in nursing education. *Nurse Education Today*, *140*, 106290. doi: 10.1016/j.nedt.2024.106290.

Li, X., & Zhang, J. (2022). Authentic leadership, perceived insider status, error management climate, and employee resilience: A cross-level study. *Frontiers in Psychology*, *13*, 938878. doi: 10.3389/fpsyg.2022.938878.

Liu, Z., Mei, S., & Guo, Y. (2021). Green human resource management, green organization identity and organizational citizenship behavior for the environment: The moderating effect of environmental values. *Chinese Management Studies*, *15*(2), 290–304. doi: 10.1108/cms-10-2019-0366.

Liu, H., Yu, X., & Peng, Y. (2023). Government subsidies and green innovation in Chinese enterprises-based on the synergy of executive incentives. *Asian Journal of Technology Innovation*, *31*(3), 534–555. doi: 10.1080/19761597.2022.2131586.

Luthans, F., & Avolio, B. J. (2003). Authentic leadership development. *Positive Organizational Scholarship*, *241*(258), 1–26.

Luu, T. T. (2019). Green human resource practices and organizational citizenship behavior for the environment: The roles of collective green crafting and environmentally specific servant leadership. *Journal of Sustainable Tourism*, *27*(8), 1167–1196.

MacCallum, R. C., Browne, M. W., & Sugawara, H. M. (1996). Power analysis and determination of sample size for covariance structure modeling. *Psychological Methods*, *1*(2), 130–149. doi: 10.1037/1082-989X.1.2.130.

Mahmudi, B., & Elmi, F. (2020). Effect of leader member exchange, organizational culture and employee engagement on organizational citizenship behavior (case study Gen Y in Perum LPPNPI). *Dinasti International Journal of Economics, Finance and Accounting*, *1*(1), 71–82. doi: 10.38035/dijefa.v1i1.224.

Maitlo, Q., Wang, X., Jingdong, Y., Lashari, I. A., Faraz, N. A., & Hajaro, N. H. (2022). Exploring green creativity: The effects of green transformational leadership, green innovation climate, and green autonomy. *Frontiers in Psychology*, *13*, 686373. doi: 10.3389/fpsyg.2022.686373.

Malik, N., & Dhar, R. L. (2017). Authentic leadership and its impact on extra role behaviour of nurses: The mediating role of psychological capital and the moderating role of autonomy. *Personnel Review*, *46*(2), 277–296. doi: 10.1108/pr-05-2015-0140.

May, D. R., Chan, A. Y. L., Hodges, T. D., & Avolio, B. J. (2003). Developing the moral component of authentic leadership. *Organizational Dynamics*, *32*(3), 247–260. doi:10.1016/S0090-2616(03)00032-9.

Mi, L., Gan, X., Xu, T., Long, R., Qiao, L., & Zhu, H. (2019). A new perspective to promote organizational citizenship behavior for the environment: The role of transformational leadership. *Journal of Cleaner Production*, *239*, 1–11.

Moriano, J. A., Molero, F., & Lévy Mangin, J. -P. (2011). Authentic leadership. Concept and validation of the ALQ in Spain. *Psicothema*, *23*(2), 336–341.

National Capital Region Planning Board (2016). Study on health infrastructure in NCR: Health final report, *I*. Available from: https://www.ncrpb.nic.in/pdf_files/NCRPB%20Health%20Final%20Report%20Vol%20I-Final_Feb%202016.pdf

Nelson, K., Boudrias, J. S., Brunet, L., Morin, D., De Civita, M., Savoie, A., & Alderson, M. (2014). Authentic leadership and psychological well-being at work of nurses: The mediating role of work climate at the individual level of analysis. *Burnout Research*, *1*(2), 90–101. doi: 10.1016/j.burn.2014.08.001.

Nisa, D. K., Santoso, B., & Azhad, M. N. (2018). Pengaruh Budaya Organisasi dan organizational citizenship behavior (OCB) terhadap Kinerja Pegawai Rumah Sakit Tk. III Baladhika Husada Jember. *International Journal of Social Science and Business*, *2*(3), 108–114. doi: 10.23887/ijssb.v2i3.16219.

Downloaded from ftp.nowpublishers.com/ijsbi/article-pdf/4/2/206/11788660/ijsbi-06-2025-0037en.pdf by guest on 22 October 2026

Öğretmenoğlu, M., Akova, O., & Göktepe, S. (2022). The mediating effects of green organizational citizenship on the relationship between green transformational leadership and green creativity: Evidence from hotels. *Journal of Hospitality and Tourism Insights*, *5*(4), 734–751. doi: 10.1108/jhti-07-2021-0166.

Organ, D. (1988). *Organizational citizenship behavior: The good solider syndrome*. Lexington, MA: Lexington Books.

Paillé, P., Chen, Y., Boiral, O., & Jin, J. (2014). The impact of human resource management on environmental performance: An employee-level study. *Journal of Business Ethics*, *121*(3), 451–466. doi: 10.1007/s10551-013-1732-0.

Paille, P., Mejıa-Morelos, J. H., Amara, N., & Norrin, H. (2022). Greening the workplace through supervisory behaviors: Assessing what really matters to employees. *The International Journal of Human Resource Management*, *33*(9), 1754–1781. doi: 10.1080/09585192.2020.1819857.

Pham, N. T., Tučková, Z., & Jabbour, C. J. C. (2019). Greening the hospitality industry: How do green human resource management practices influence organizational citizenship behavior in hotels? A mixed-methods study. *Tourism Management*, *72*, 386–399. doi: 10.1016/j.tourman.2018.12.008.

Podsakoff, P. M., MacKenzie, S. B., Paine, J. B., & Bachrach, D. G. (2000). Organizational citizenship behaviors: A critical review of the theoretical and empirical literature and suggestions for future research. *Journal of Management*, *26*(3), 513–563. doi: 10.1177/014920630002600307.

Podsakoff, P. M., MacKenzie, S. B., Lee, J. Y., & Podsakoff, N. P. (2003). Common method biases in behavioral research: A critical review of the literature and recommended remedies. *Journal of Applied Psychology*, *88*(5), 879–903. doi: 10.1037/0021-9010.88.5.879.

Practice Greenhealth (2020). Sustainability solutions for health care. Available from: https://practicegreenhealth.org/

Qalati, S. A., Badwy, H. E., Al-Romeedy, B. S., & Hasanein, A. M. (2026). Leading sustainability in restaurants: How authentic leadership cultivates green commitment through innovation and trust. *Journal of Hospitality and Tourism Insights*, *9*(3), 1105–1124. doi: 10.1108/jhti-05-2025-0567.

Raineri, N., & Paillé, P. (2016). Linking corporate policy and supervisory support with environmental citizenship behaviors: The role of employee environmental beliefs and commitment. *Journal of Business Ethics*, *137*(1), 129–148. doi: 10.1007/s10551-015-2548-x.

Rauniar, R., & Cao, R. (2025). An empirical study on the role of authentic leadership in strategic agile operations, organizational sustainability, and business performance. *Global Journal of Flexible Systems Management*, *26*(2), 1–20. doi: 10.1007/s40171-024-00432-w.

Rego, A., Sousa, F., Marques, C., & e Cunha, M. P. (2012). Authentic leadership promoting employees' psychological capital and creativity. *Journal of Business Research*, *65*(3), 429–437. doi: 10.1016/j.jbusres.2011.10.003.

Rehman, F. U., & Zeb, A. (2023). Investigating the nexus between authentic leadership, employees' green creativity, and psychological environment: Evidence from emerging economy. *Environmental Science and Pollution Research*, *30*(49), 107746–107758. doi: 10.1007/s11356-023-29928-1.

Revilla, M. A., Saris, W. E., & Krosnick, J. A. (2014). Choosing the number of categories in agree–disagree scales. *Sociological Methods and Research*, *43*(1), 73–97. doi: 10.1177/0049124113509605.

Rindfleisch, A., Malter, A. J., Ganesan, S., & Moorman, C. (2008). Cross-sectional versus longitudinal survey research: Concepts, findings, and guidelines. *Journal of Marketing Research*, *45*(3), 261–279. doi: 10.1509/jmkr.45.3.261.

Robertson, J. L., & Barling, J. (2017). Toward a new measure of ethical leadership. *Journal of Business Ethics*, *101*(3), 551–563.

Roscoe, S., Subramanian, N., Jabbour, C. J., & Chong, T. (2019). Green human resource management and the enablers of green organisational culture: Enhancing a firm's environmental performance for sustainable development. *Business Strategy and the Environment*, *28*(5), 737–749. doi: 10.1002/bse.2277.

Downloaded from ftp.nowpublishers.com/ijsbi/article-pdf/4/2/206/11788660/ijsbi-06-2025-0037en.pdf by guest on 22 October 2026

Saeed, B. B., Afsar, B., Hafeez, S., Khan, I., Tahir, M., & Afridi, M. A. (2019). Promoting employee's proenvironmental behavior through green human resource management practices. *Corporate Social Responsibility and Environmental Management*, *26*(2), 424–438. doi: 10.1002/csr.1694.

Schein, E. H. (1985). Increasing organizational effectiveness through better human resource planning and development. *Readings in human resource management*, *376*.

Schein, E. H. (2010). *Organizational culture and leadership* (Vol. 2). John Wiley & Sons.

Shamshad, J., & Rehman, R. U. (2025). Innovative approaches to sustainable wastewater treatment: A comprehensive exploration of conventional and emerging technologies. *Environmental Science: Advances*, *4*(2), 189–222. doi:10.1039/D4VA00136B.

Spector, P. E. (2019). Do not cross me: Optimizing the use of cross-sectional designs. *Journal of Business and Psychology*, *34*(2), 125–137. doi: 10.1007/s10869-018-09613-8.

Srivastava, A. P., Mani, V., Yadav, M., & Joshi, Y. (2020). Authentic leadership towards sustainability in higher education–an integrated green model. *International Journal of Manpower*, *41*(7), 901–923. doi: 10.1108/ijm-08-2019-0404.

Sroufe, R. P., Liebowitz, J., & Sivasubramaniam, N. (2010). Are you a leader or a laggard? HR's role in creating a sustainability culture. *People and Strategy*, *33*(1), 34–42.

Sultan, M., & Hussain, S. (2025). Towards a sustainable workforce: Integrating workplace spirituality, green leadership, and employee adaptability for green creativity. *Discover Sustainability*, *6*(1), 318. doi: 10.1007/s43621-025-00971-x.

Tak, J., & Roh, T. (2016). Effects of supervisor's authentic leadership on job performance for employees: Focused on the mediating effect of organizational commitment and organizational citizenship behavior. *Korea Contents Associaition*, *16*(7), 319–336. doi: 10.5392/jkca.2016.16.07.319.

Tanveer, M., Khan, S. A. R., Umar, M., Yu, Z., Sajid, M. J., & Haq, I. U. (2022). Waste management and green technology: Future trends in circular economy leading towards environmental sustainability. *Environmental Science and Pollution Research*, *29*(53), 80161–80178. doi: 10.1007/s11356-022-23238-8.

Temminck, E., Mearns, K., & Fruhen, L. (2015). Motivating employees towards sustainable behaviour. *Business Strategy and the Environment*, *24*(6), 402–412. doi: 10.1002/bse.1827.

ud Din, M., Tanveer, M., & Khan, M. F. (2025). The green shift: Harnessing leadership, HR, and culture for sustainable success. *Waste Management Bulletin*, *3*(4), 100220. doi: 10.1016/j.wmb.2025.100220.

Umrani, W. A., Channa, N. A., Ahmed, U., Syed, J., Pahi, M. H., & Ramayah, T. (2022). The laws of attraction: Role of green human resources, culture and environmental performance in the hospitality sector. *International Journal of Hospitality Management*, *103*, 103222. doi: 10.1016/j.ijhm.2022.103222.

Valsania, E. S., Leon, J., Alonso, F., & Cantisano, G. (2012). Authentic leadership and its effect on employees' organizational citizenship behaviours. *Psicothema*, *24*(4), 561–566.

Walumbwa, F. O., Avolio, B. J., Gardner, W. L., Wernsing, T. S., & Peterson, S. J. (2008). Authentic leadership: Development and validation of a theory-based measure. *Journal of Management*, *34*(1), 89–126. doi: 10.1177/0149206307308913.

Walumbwa, F. O., Peterson, S. J., Avolio, B. J., & Hartnell, C. A. (2010). An investigation of the relationships among leader and follower psychological capital, service climate, and job performance. *Personnel Psychology*, *63*(4), 937–963. doi: 10.1111/j.1744-6570.2010.01193.x.

Wong, C. A., & Cummings, G. G. (2009). The influence of authentic leadership behaviors on trust and work outcomes of health care staff. *Journal of Leadership Studies*, *3*(2), 6–23. doi: 10.1002/jls.20104.

World Health Organization (2017). *World health statistics 2017: Monitoring health for the SDGs, sustainable development goals*. World Health Organization. Available from: https://www.who.int/docs/default-source/gho-documents/world-health-statistic-reports/v-4-17162-world-health-statistics-2017.pd

Downloaded from ftp.nowpublishers.com/ijsbi/article-pdf/4/2/206/11788660/ijsbi-06-2025-0037en.pdf by guest on 22 October 2026

Wu, B., & Xu, Y. (2025). Towards sustainable development: Can industrial collaborative agglomeration become an accelerator for green and low-carbon transformation of resource-based cities in China? *Journal of Environmental Management*, *381*, 125199. doi: 10.1016/j.jenvman.2025.125199.

Zameer, H., Wang, Y., & Saeed, M. R. (2021a). Net-zero emission targets and the role of managerial environmental awareness, customer pressure, and regulatory control toward environmental performance. *Business Strategy and the Environment*, *30*(8), 4223–4236. doi: 10.1002/bse.2866.

Zameer, H., Wang, Y., Vasbieva, D. G., & Abbas, Q. (2021b). Exploring a pathway to carbon neutrality via reinforcing environmental performance through green process innovation, environmental orientation and green competitive advantage. *Journal of Environmental Management*, *296*, 113383. doi: 10.1016/j.jenvman.2021.113383.

Zeb A. (2020). Relationship between organizational factors and job performance (Doctoral dissertation, Universiti Tun Hussein Onn Malaysia).

Zientara, P., & Zamojska, A. (2018). Green organizational climates and employee pro-environmental behaviour in the hotel industry. *Journal of Sustainable Tourism*, *26*(7), 1142–1159. doi: 10.1080/09669582.2016.1206554.

Corresponding author
Shalini Shukla can be contacted at: shuklashalini@ymail.com

For instructions on how to order reprints of this article, please visit our website:
www.emeraldgrouppublishing.com/licensing/reprints.htm
Or contact us for further details: **permissions@emeraldinsight.com**

Downloaded from ftp.nowpublishers.com/ijsbi/article-pdf/4/2/206/11788660/ijsbi-06-2025-0037en.pdf by guest on 22 October 2026